LIFTING HOOKS MAIN FRAME
ADD-ON KIT

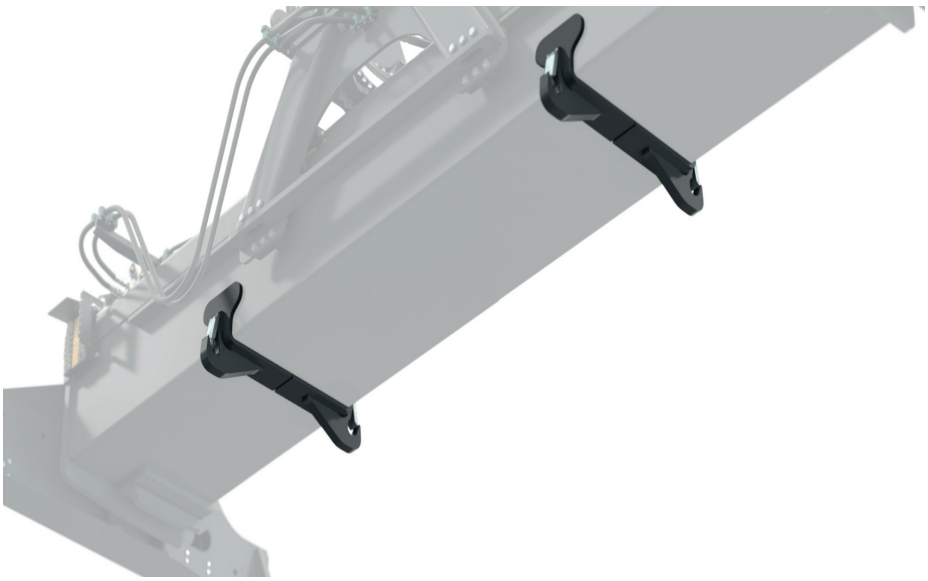

The image displays an example of the add-on installed on a specific spreader model and may differ between models.

THE IDEA OF THE ELME ADD-ON KIT is to facilitate the possibility of adding options to your spreader after the initial purchase, using genuine parts that are designed to specifically fit your spreader.

Every add-on kit contains all necessities for the chosen option, including all genuine parts and documentation needed for a fast and easy installation.

The add-on kit enables adding options to your spreader - at any chosen time. You get a reliable and simple installation, thus a low and cost-effective downtime during installation. In addition, you get a 1-year warranty on the included components.

LIFTING HOOKS ON THE MAIN FRAME will increase the flexibility in the non-container category which leaves more options to handle a broad variety of cargo.

The lifting hooks are favourable when frequently changing from slings to container or vice versa when requested. It gives a fast accessibility as the design of the hooks demands less equipment to secure the slings to the spreader.

(Certified welder is required)

PARTS INCLUDED IN THE KIT:

- Lifting hooks
- Assembly material
- Installation instructions

THE ADD-ON KIT IS VALID FOR:

- Standard model 817 INNOVATION
- Standard model 817 INNOVATION WTP

All information is subject to change without notice.

ELME™
Swedish Spreader Systems

© May 2022 ELME Spreader AB

ELME GENUINE PARTS - PERFORMANCE, RELIABILITY AND SAFETY

An ELME spreader consists of more than 3,000 parts – all carefully designed and built to provide the highest possible level of **performance**. Elme Genuine Parts, our range of approved spare parts and accessories, are 100 % made for your ELME spreader – with the exact right qualities, dimensions and features – to secure the **reliability** and **safety** of your product. By using ELME genuine parts, you always get parts you can rely on and true peace of mind. If you are using non-genuine parts, you put weak links into a strong, perfectly designed chain of interactive components.

On a number of our spare parts we expand **safety** and traceability with a tooled product labeling, everything to improve the certainty of using genuine parts. Another example of this process is our twistlock certificate. This document ensures the origin and quality of the twistlocks and certifies that the twistlocks are tested.

Every single part of an ELME spreader is built at our plant in Älmhult, Sweden. And that's the way it's been since 1974. All the work is carried out here - from design and product development to manufacturing, assembling and testing. This unique approach lets us have 100 % control over the production and the final quality of our products. It's our way to ensure the **performance**, **reliability** and **safety**.

Please visit **www.elme.com** for more information.

HEAD QUARTER AND PRODUCTION
ELME Spreader AB
Phone +46 10 222 18 00
Email sales@elme.com
Website www.elme.com

SALES AND SPARE PARTS
ELME Spreader Trading (Shanghai) Co., Ltd
Phone +86 21 5169 8922
Email sales.cn@elme.com

SPARE PARTS
ELME Americas Inc.
Phone +1 731 588 02 20
+1 731 332 09 29
Email sales.us@elme.com

ELME™
Swedish Spreader Systems