MODEL 8110

FOR LADEN CONTAINER HANDLING WITH RAIL MOUNTED OR RUBBER TYRED GANTRY CRANES

Standard supply includes:

- Mounting arrangement to fit crane
- Four pendular ISO twistlocks
- Lifting eyes near twistlocks
- Hydraulic telescoping
- Solenoid valves for all hydraulic functions
- Electrical and mechanical twistlock protection and indication system
- Electric telescoping protection system
- Lift interrupt signal
- LED indication lights

Spreader Model 8110 is a telescopic top spreader for handling of laden ISO containers up to 41 tonnes. 8110 is designed for mounting on Rail Mounted (RMG) or Rubber Tyred Gantry (RTG) cranes.

The strong and basic concept offers advantages, such as two parallel telescopic beams, assuring max overlap. Beam sections dimensioned to absorb not only the vertical, but also the very considerable horizontal forces.

TWISTLOCK SYSTEM

The twistlock system is manufactured in a rugged design and is well-proven since many years. 8110 has hardened, pendulling ISO quick exchange twistlocks, hydraulically activated with electrical and mechanical interlocking against faulty locking and unlocking.

TELESCOPING SYSTEM

Telescoping is powered by one hydraulic cylinder inside each beam.

HYDRAULIC SYSTEM

Double electric motor- and pump assemblies assure simultaneous telescoping of both beams. Spreader can be operated with one electric motor and pump.

CONTROL AND PROTECTION SYSTEM

Control voltage on the spreader is always converted to 24V DC for safety and reliability. Electrical systems monitor the state of the spreader at all times. Indicator lights advise the operator when the spreader is correctly seated, locked or not locked. Each signal is a precondition for the important protection functions of the spreader. Such as twistlock activation, telescoping and lift interrupt.

ELME™
Swedish Spreader Systems

MODEL 8110

©April 2018 ELME Spreader AB

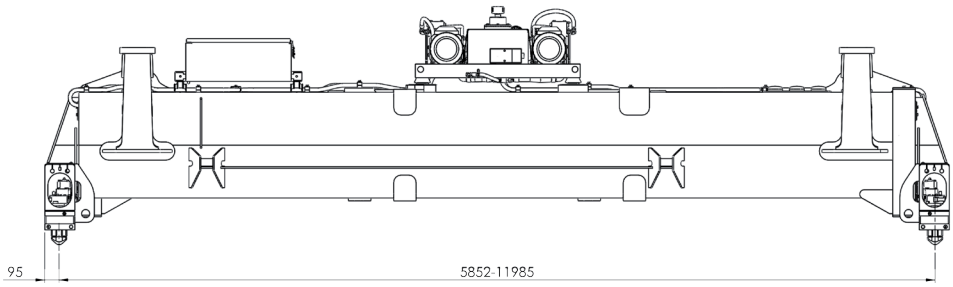

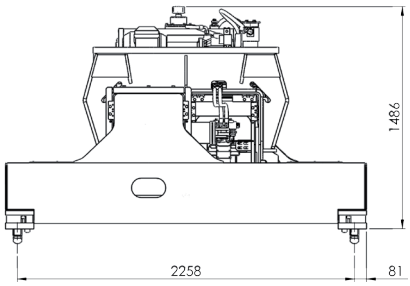

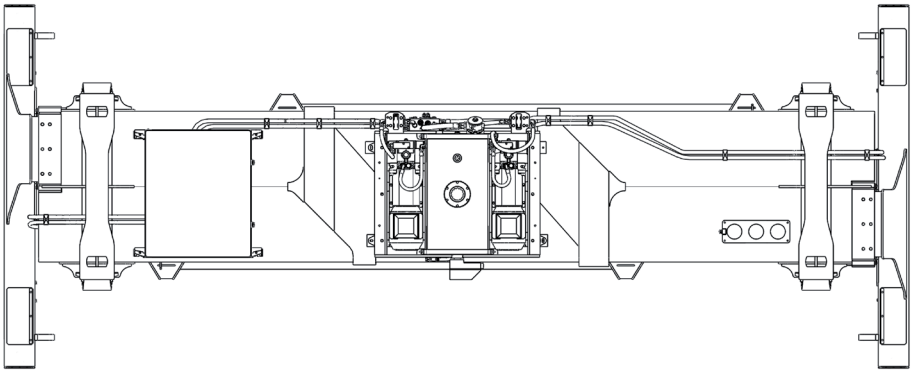

8110.

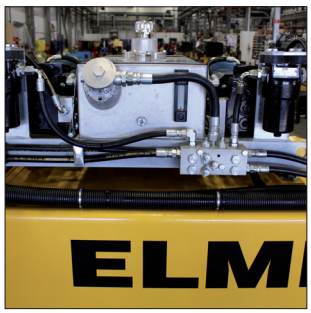
Power pack.

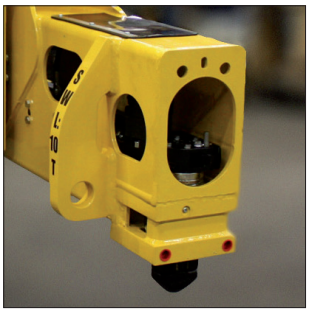
Twistlock and lifting eye.

TECHNICAL SPECIFICATIONS

Type of application	RTG, RMG
Spreader weight (TW)	7 400 kgs without extra equipment
Lifting capacity (SWL), spreader	41 tonnes ± 10 % eccentric load
Lifting capacity (SWL), lifting eyes	4 x 10 tonnes
Twistlock	ISO pendular 20 mm
Telescopic positions	20 and 40ft
Telescoping speed from 20-40ft	< 25 sec.*
Hydraulics, operating pressure up to	140 bar
Hydraulics, flow	46 L/min (2x23)
Hydraulics, tank volume	90 L
Power supply	400 VAC/50 Hz
Electrical motors	2 x 4 kW
Electric - control voltage	24 VDC
Colour	Signal yellow RAL 1003
Paint thickness	220 µ

* Calculated speed at 20° C

All specifications are subject to change without notice. A list of options enables you to adapt the product more precisely to your needs and further information is available on request.

HEAD QUARTER AND PRODUCTION
ELME Spreader AB
Phone +46 476 558 00
Email sales@elme.com
Website www.elme.com

SALES AND SPARE PARTS
ELME Spreader Trading (Shanghai) Co., Ltd
Phone +86 21 5169 8922
Email sales.cn@elme.com

SPARE PARTS
ELME Americas Inc.
Phone +1 731 588 02 20
Email sales.us@elme.com

For details, spare parts and more products, visit **www.elme.com**.

ELME™
Swedish Spreader Systems