# MODEL 8810

**FOR LADEN CONTAINER HANDLING WITH MOBILE HARBOR CRANES**

## Standard supply includes:

- One or two pin mounting to fit crane hook
- Four pendular ISO twistlocks
- Lifting eyes near twistlocks
- Hydraulic telescoping system
- Hydraulic center of gravity adjustment
- Hydraulically and mechanically controlled stop pins
- Solenoid valves for all hydraulic functions
- Six hydraulic side flippers
- Electrical and mechanical twistlock protection and indication system
- Electric telescoping protection system
- Lift interrupt signal
- LED indication lights

**Spreader Model 8810 is a telescopic top spreader for handling of laden ISO containers up to 40 tonnes. 8810 is designed for mounting on Mobile Harbor cranes.**

The strong and basic concept offers distinct advantages, such as two parallel telescopic beams, assuring max overlap. Beam sections dimensioned to absorb not only the vertical, but also the very considerable horitzontal forces.

### TWISTLOCK SYSTEM

The twistlock system is manufactured in a rugged design and is well-proven since many years. 8810 is equipped with hardened, pendulling ISO quick exchange twistlocks, hydraulically activated with electrical and mechanical interlocking against faulty locking and unlocking.

### TELESCOPING SYSTEM

Telescoping is powered by one hydraulic cylinder inside each beam.

### CENTER OF GRAVITY ADJUSTMENT

The center of gravity adjustment is executed by one hydraulic cylinder on top of the mainframe.

### FLIPPER SYSTEM

The six sideflippers are each powered by two hydraulic cylinders mounted well protected.

### HYDRAULIC SYSTEM

Double electric motor and pump assemblies assure simultaneous telescoping of both beams. The spreader can be operated with one electric motor and pump.

### CONTROL AND PROTECTION SYSTEM

The control voltage on the spreader is always converted to 24V DC for safety and reliability. Electrical systems monitor the state of the spreader at all times. Indicator lights advise the operator when the spreader is correctly seated, locked or not locked. Each signal is a precondition for the important protection functions of the spreader, such as twistlock activation, telescoping and lift interrupt.

ELME™
Swedish Spreader Systems

# MODEL 8810

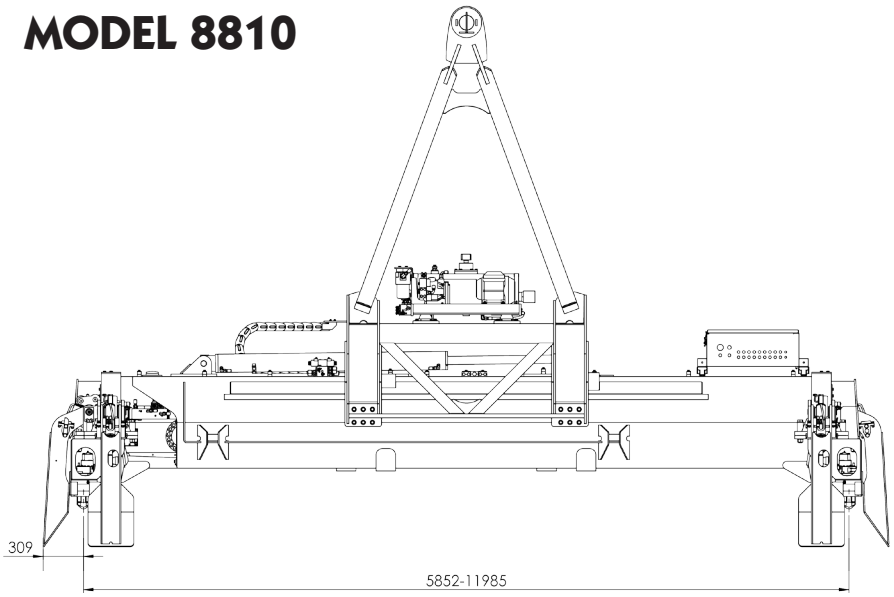


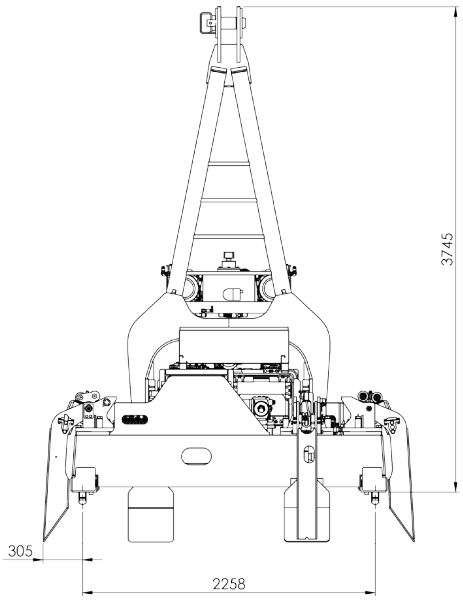


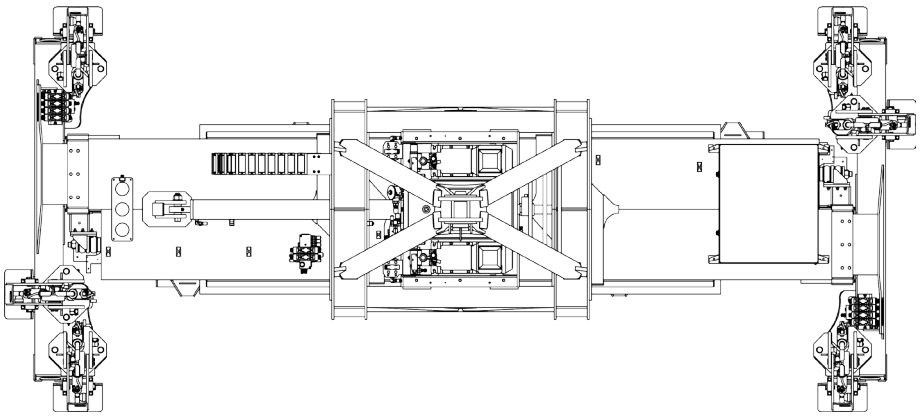

8810.

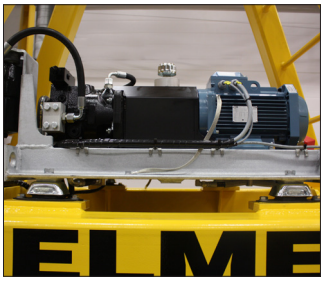

Power pack.

Side flippers.

## TECHNICAL SPECIFICATIONS

| | |
|---|---|
| Type of application | Mobile Harbour Cranes |
| Spreader weight (TW) | 10 200 kgs without extra equipment |
| Lifting capacity (SWL), spreader | 40 tonnes +/- 10 % eccentric load |
| Lifting capacity (SWL), lifting eyes | 4 x 10 tonnes |
| Twistlock | ISO pendular 20 mm |
| Gathering torque down, theoretically | 3105 Nm |
| Overload torque up, theoretically | 4657 Nm |
| Telescopic positions | 20 and 40ft |
| Telescoping speed from 20-40ft | < 25 sec.* |
| Gravity adjustment +/- 800 mm | < 28 sec.* |
| Hydraulics, operating pressure up to | 140 bar |
| Hydraulics, flow / tank volume | 46 L/min (2x23) / 90 L |
| Power supply | 400 VAC/50 HZ |
| Electrical motors | 2 x 4 kW |
| Electric - control voltage | 24 VDC |
| Colour | Signal yellow RAL 1003 |
| Paint thickness | 220 µ |

* Calculated speed at 20° C

All specifications are subject to change without notice. A list of options enables you to adapt the product more precisely to your needs and further information is available on request.

**HEAD QUARTER AND PRODUCTION**
**ELME Spreader AB**
Phone +46 476 558 00
Email sales@elme.com
Website www.elme.com

**SALES AND SPARE PARTS**
**ELME Spreader Trading (Shanghai) Co., Ltd**
Phone +86 21 5169 8922
Email sales.cn@elme.com

**SPARE PARTS**
**ELME Americas Inc.**
Phone +1 731 588 02 20
Email sales.us@elme.com

For details, spare parts and more products, visit **www.elme.com.**

ELME™
Swedish Spreader Systems

©January 2017 ELME Spreader AB